RACO 487 Flush Slider

Typical Door, Frame & Sidelite Details

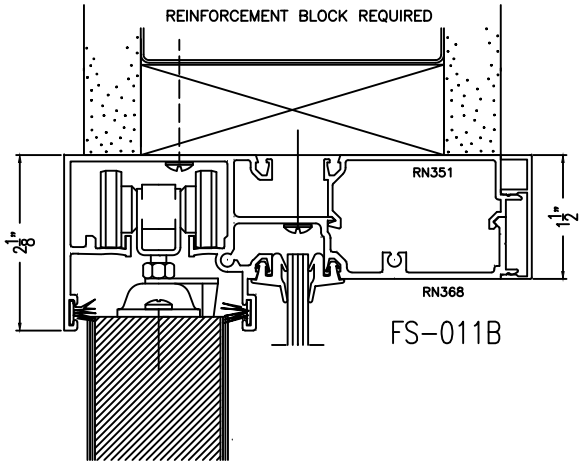

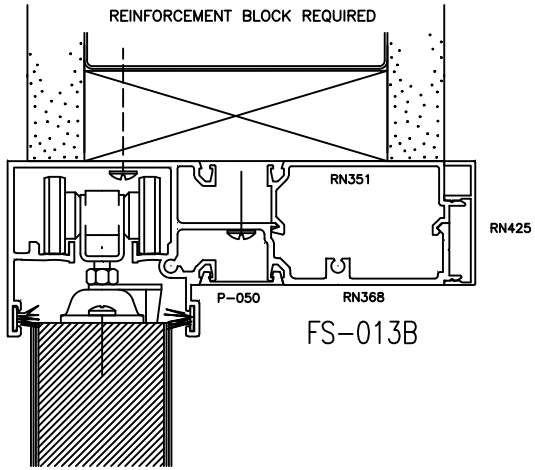

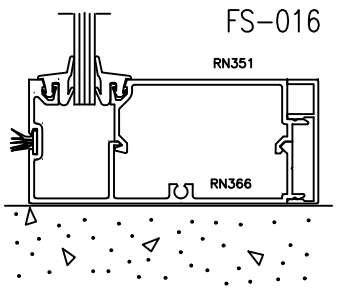

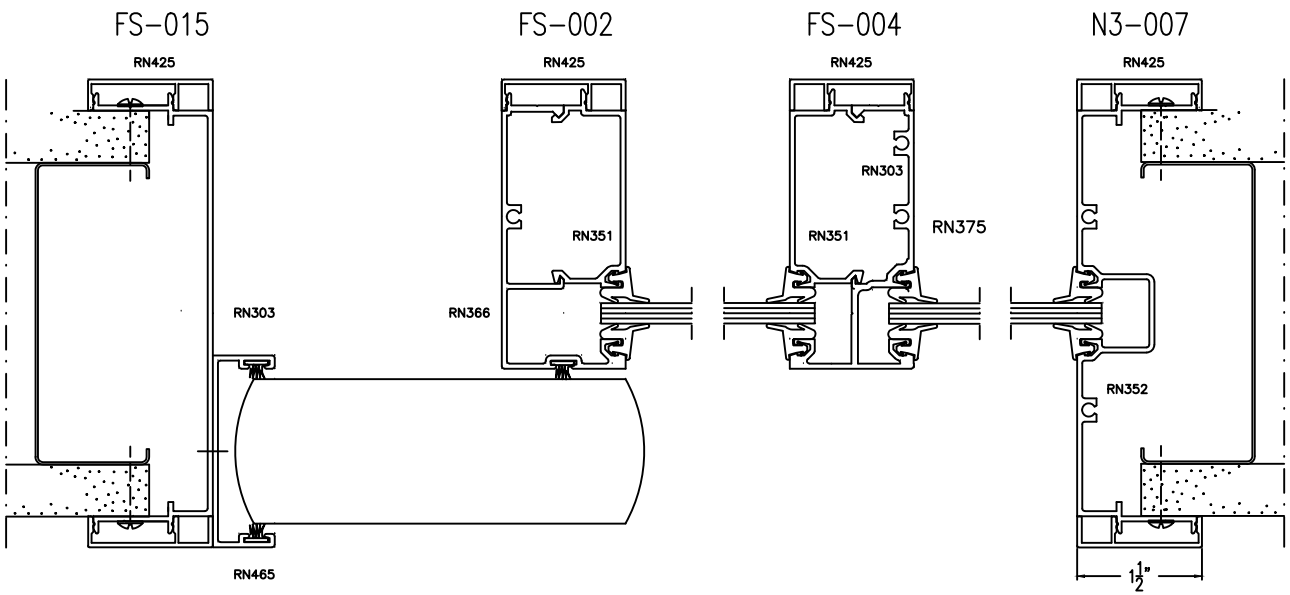

Revised 2/26/2020