RACO 375 Series

Typical Door, Frame & Sidelite Details

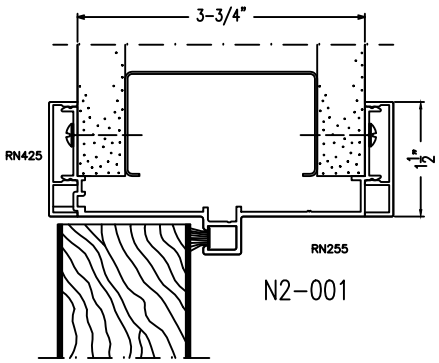

N2-001

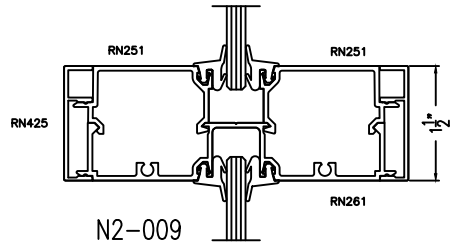

N2-009

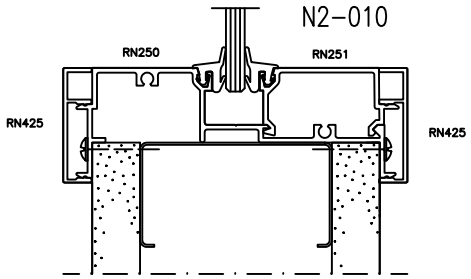

N2-010

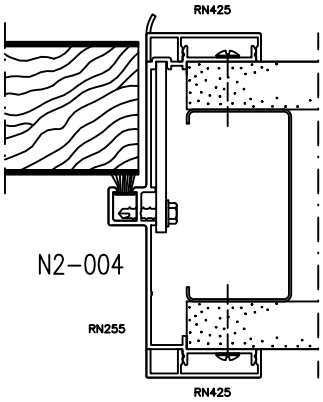

N2-004

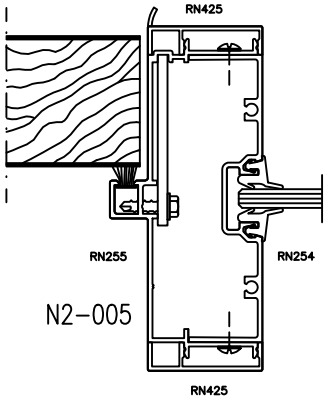

N2-005

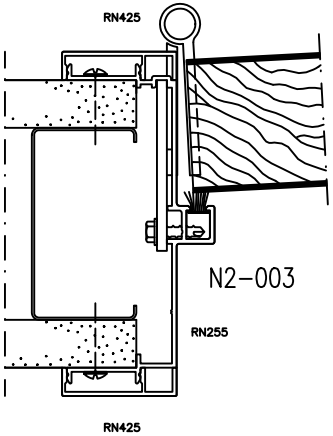

N2-003

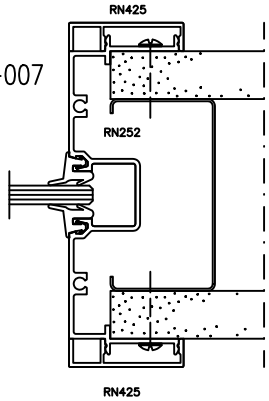

N2-007

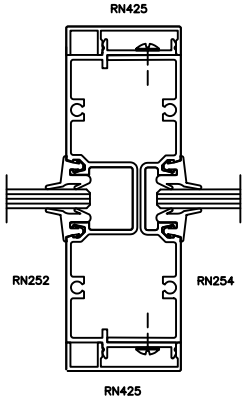

N2-013

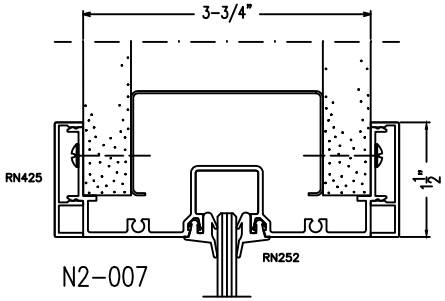

N2-007

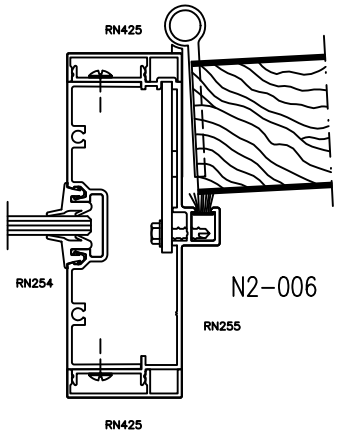

N2-006

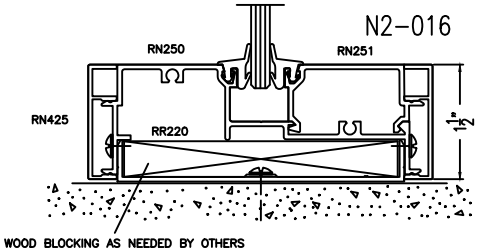

N2-016

LIBERTY
A RACO DESIGN DIVISION

Revised 3/19/2020

RACO 375 Series

Typical Door, Frame & Sidelite Details

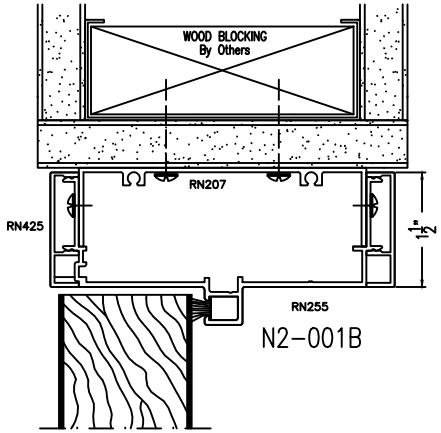

N2-001B

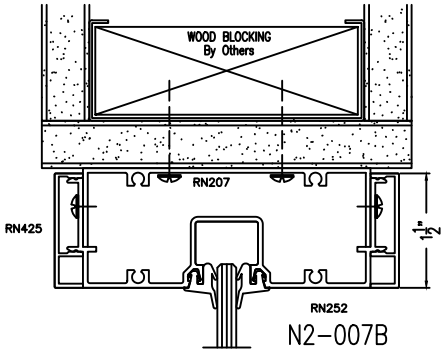

N2-007B

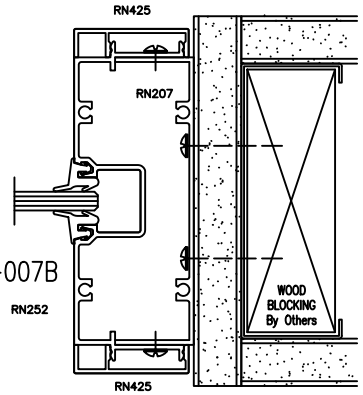

N2-007B

RN252

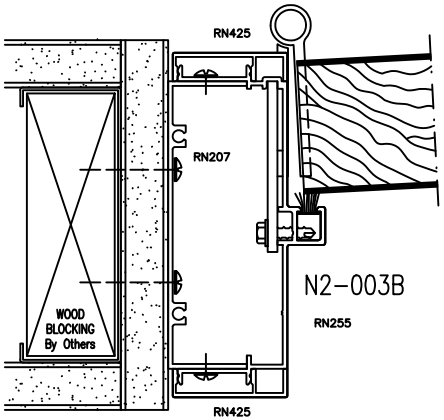

N2-003B

RN255

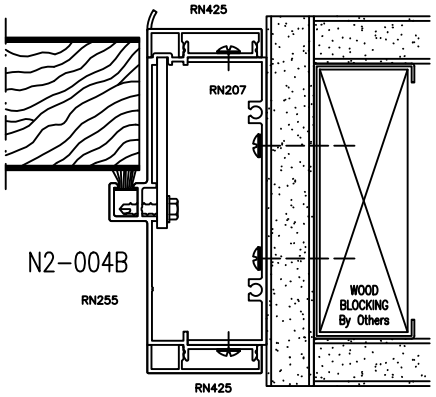

N2-004B

RN255

N2-POS3

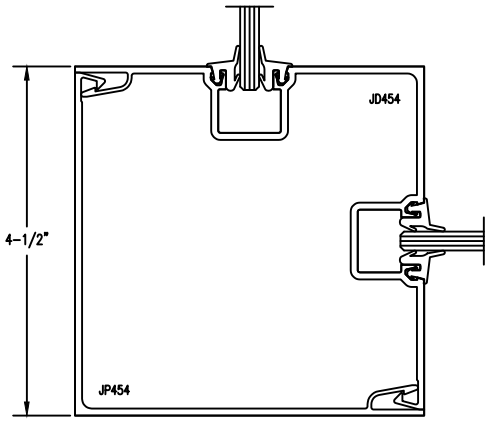

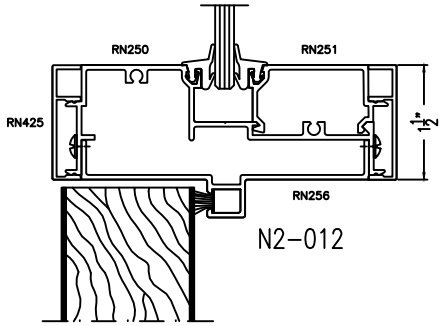

N2-012

N2-416

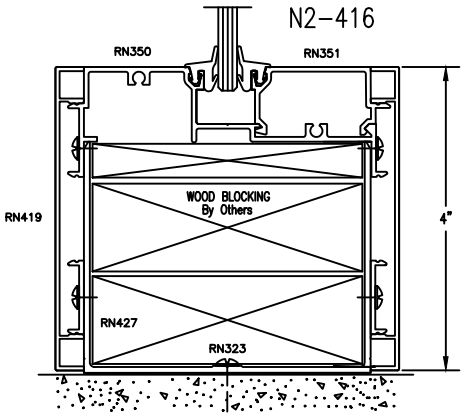

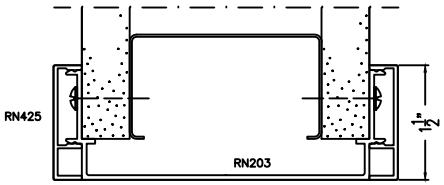

N2-014

LIBERTY
A RACO DESIGN DIVISION