RACO 487 Offset Slider

Typical Over Drywall Details

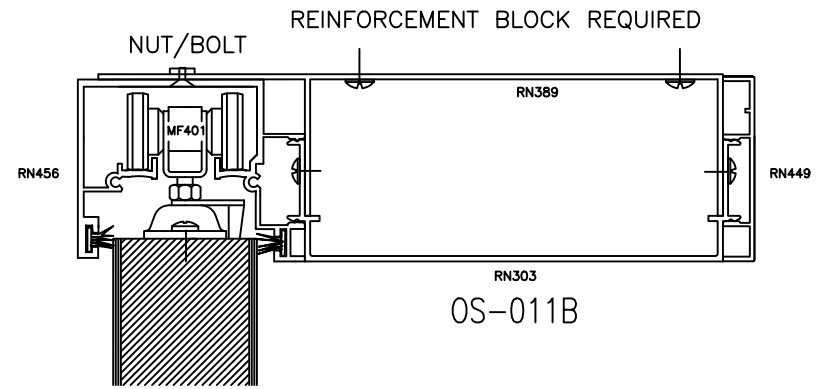

OS-011B

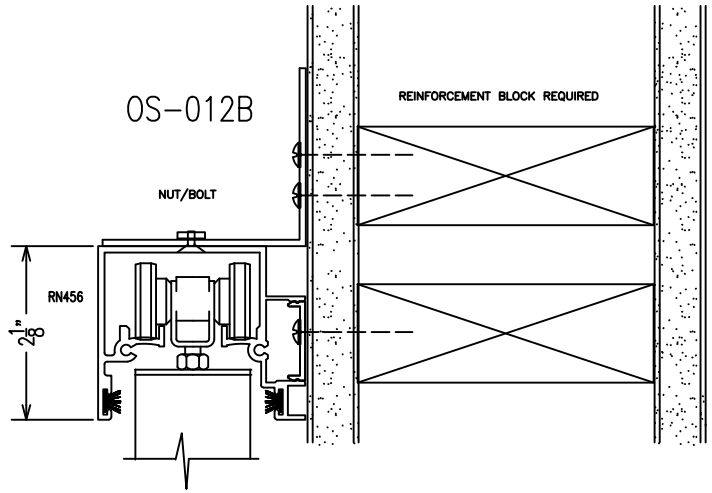

OS-012B

OS-015

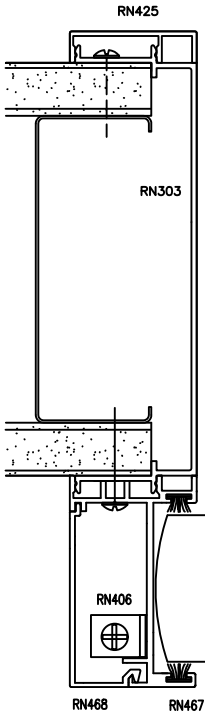

OS-002

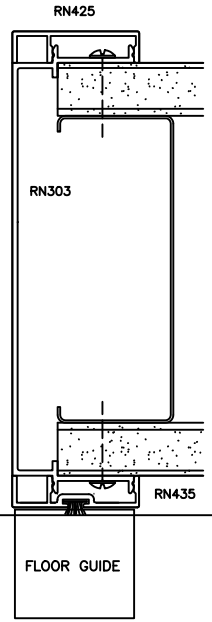

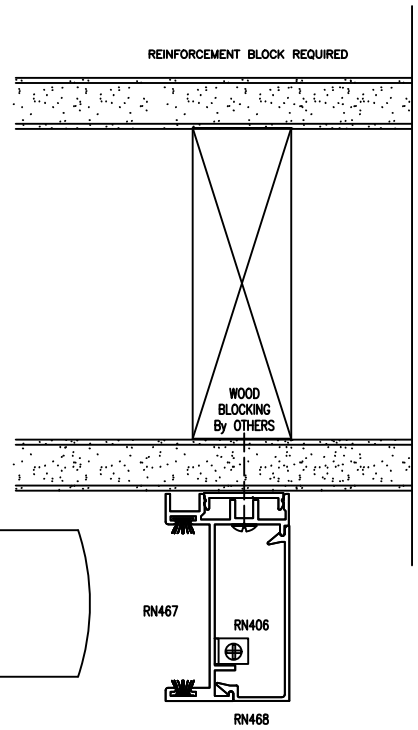

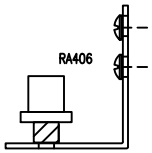

Revised 4/22/2020