RACO 487 Series

Typical Door, Frame & Sidelite Details

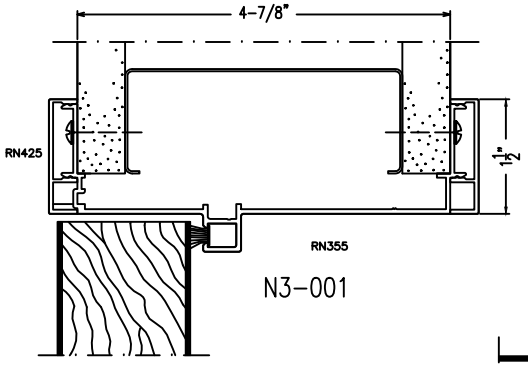

N3-001

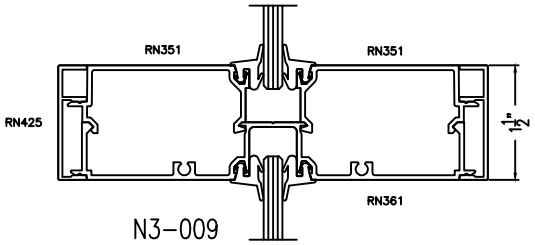

N3-009

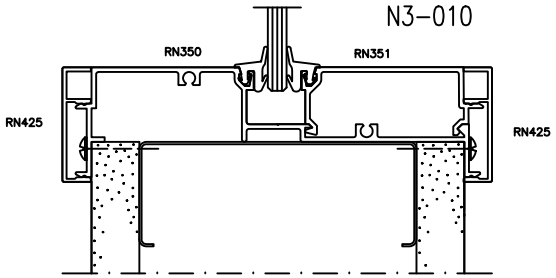

N3-010

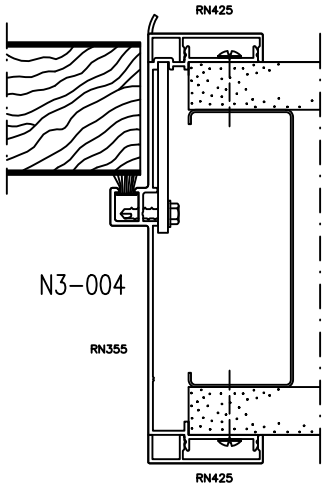

N3-004

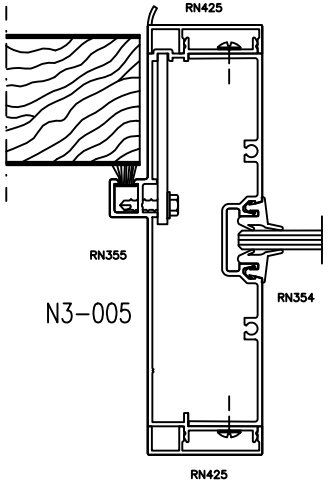

N3-005

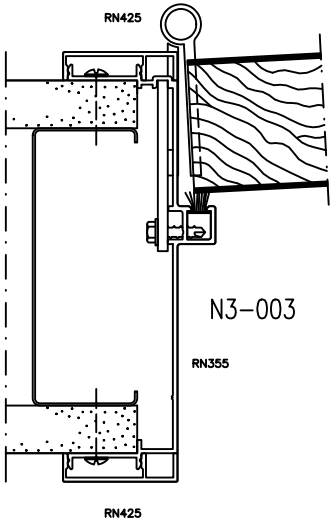

N3-003

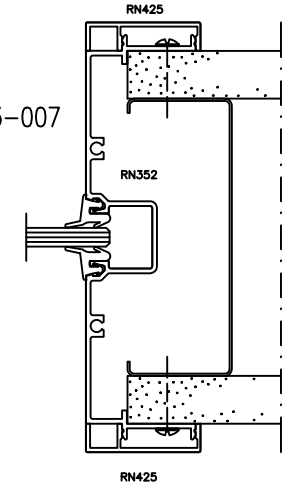

N3-007

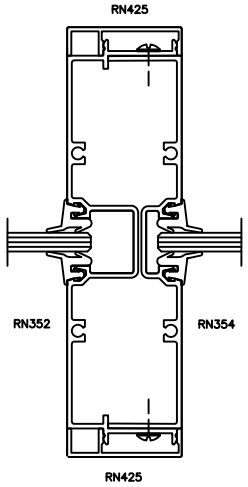

N3-013

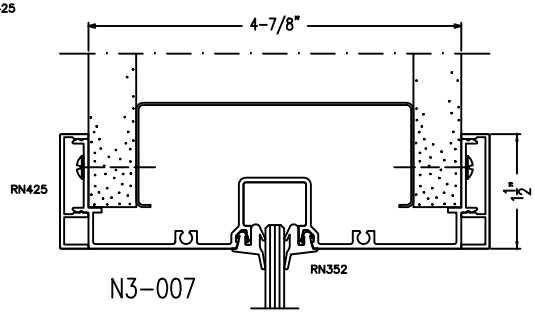

N3-007

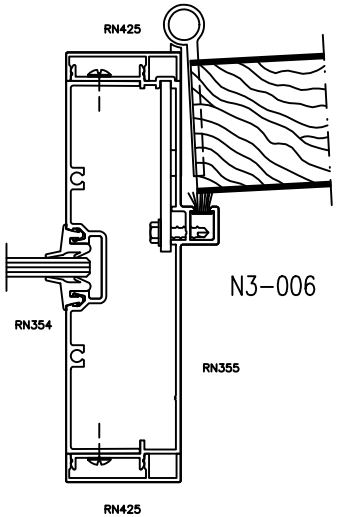

N3-006

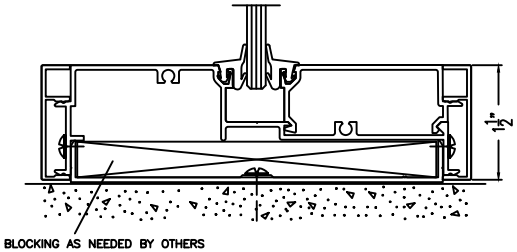

Revised 7/14/2020

RACO 487 Series

Typical Door, Frame & Sidelite Details

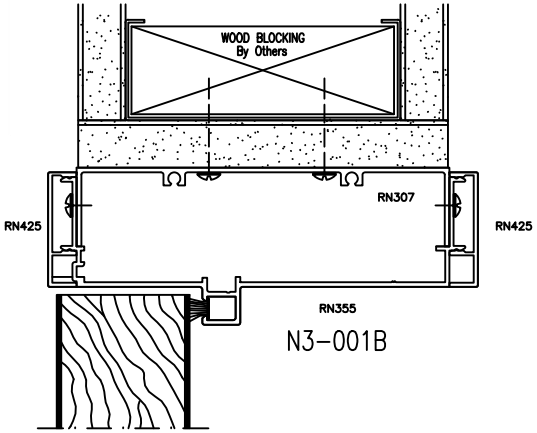

N3-001B

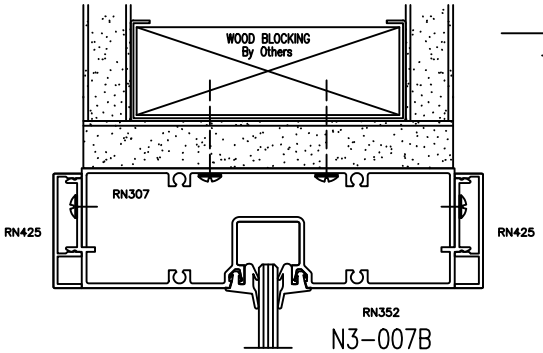

N3-007B

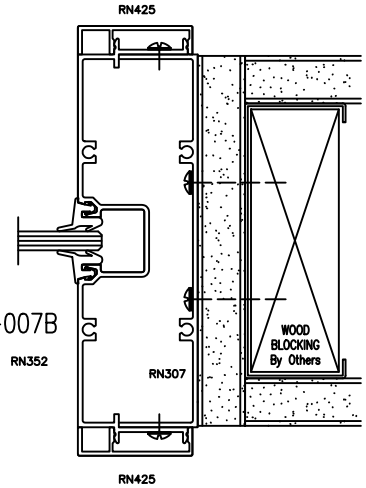

N3-007B

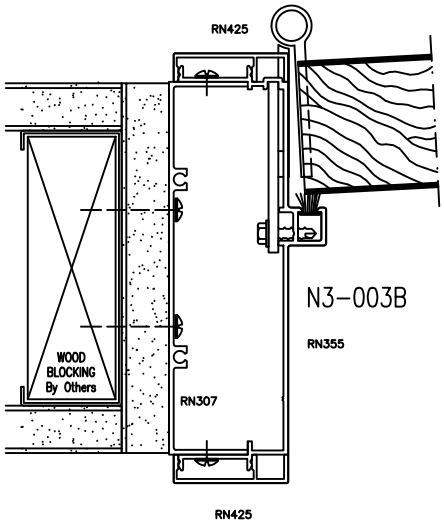

N3-003B

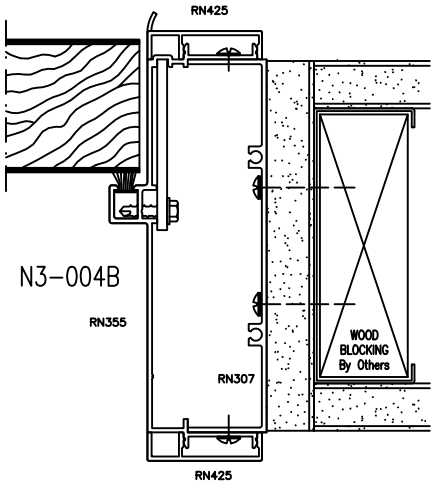

N3-004B

N3-POS3

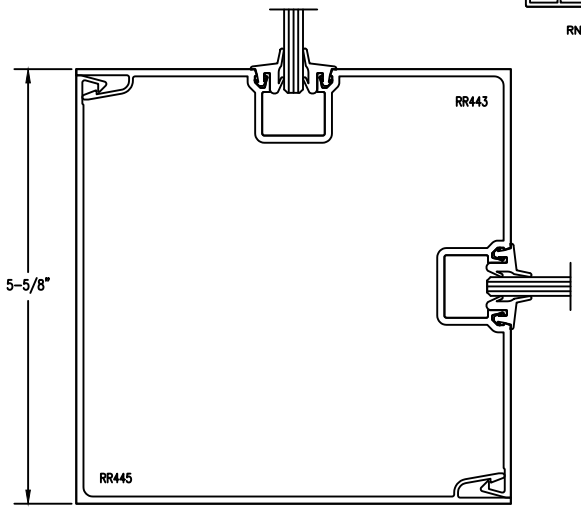

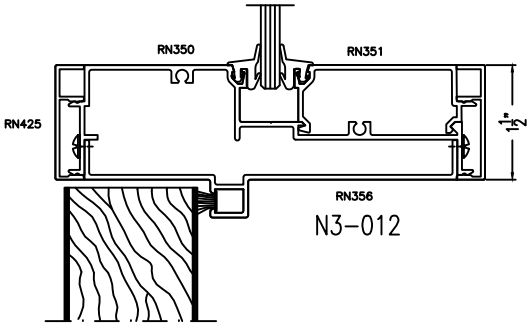

N3-012

N3-416

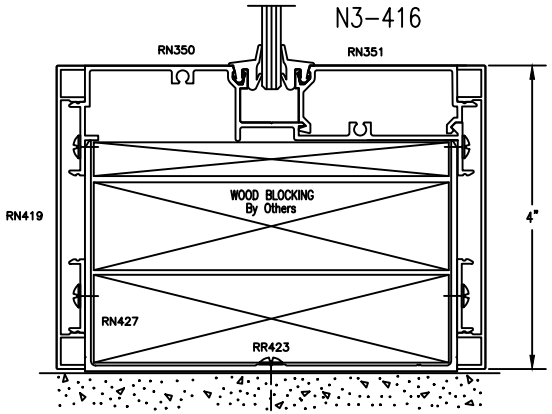

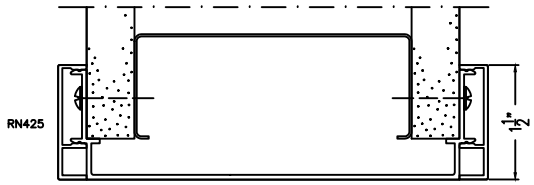

N3-014

LIBERTY
A RACO DESIGN DIVISION